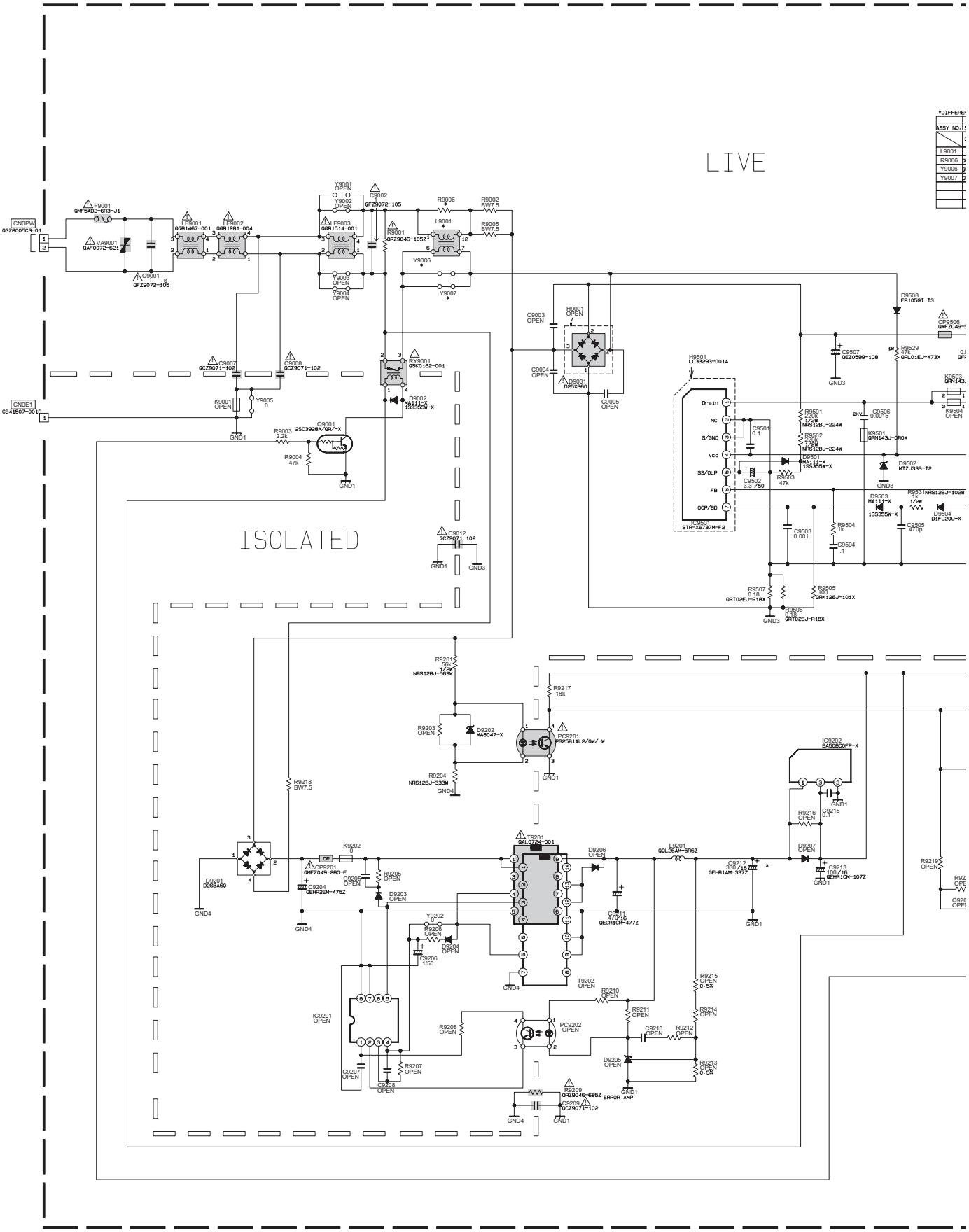
LIVE
ISOLATED
CN0PW
CN0E1
F9001
VA9001
LF9001
LF9002
LF9003
C9001
C9002
Y9001
Y9002
Y9003
Y9004
Y9005
Y9006
Y9007
R9001
R9002
R9005
R9006
L9001
C9007
C9008
RY9001
D9002
K9001
Q9001
R9003
R9004
C9012
H9001
D9001
C9003
C9004
C9005
D9508
C9507
R9529
H9501
IC9501
STR-X6737N-F2
C9501
C9502
R9501
R9502
R9503
C9503
R9504
C9504
C9505
D9502
D9503
D9504
R9505
R9506
R9507
R9201
R9203
R9204
R9217
D9202
PC9201
R9218
D9201
K9202
C9201
C9204
R9205
D9203
T9201
D9206
L9201
C9212
C9213
IC9202
R9216
C9215
D9207
R9219
C9211
Y9202
R9206
D9204
C9206
T9202
R9210
R9211
R9212
R9214
R9215
R9213
IC9201
R9208
PC9202
C9210
D9205
C9207
R9207
C9208
R9209
C9209
ERROR AMP
GND1
GND3
GND4

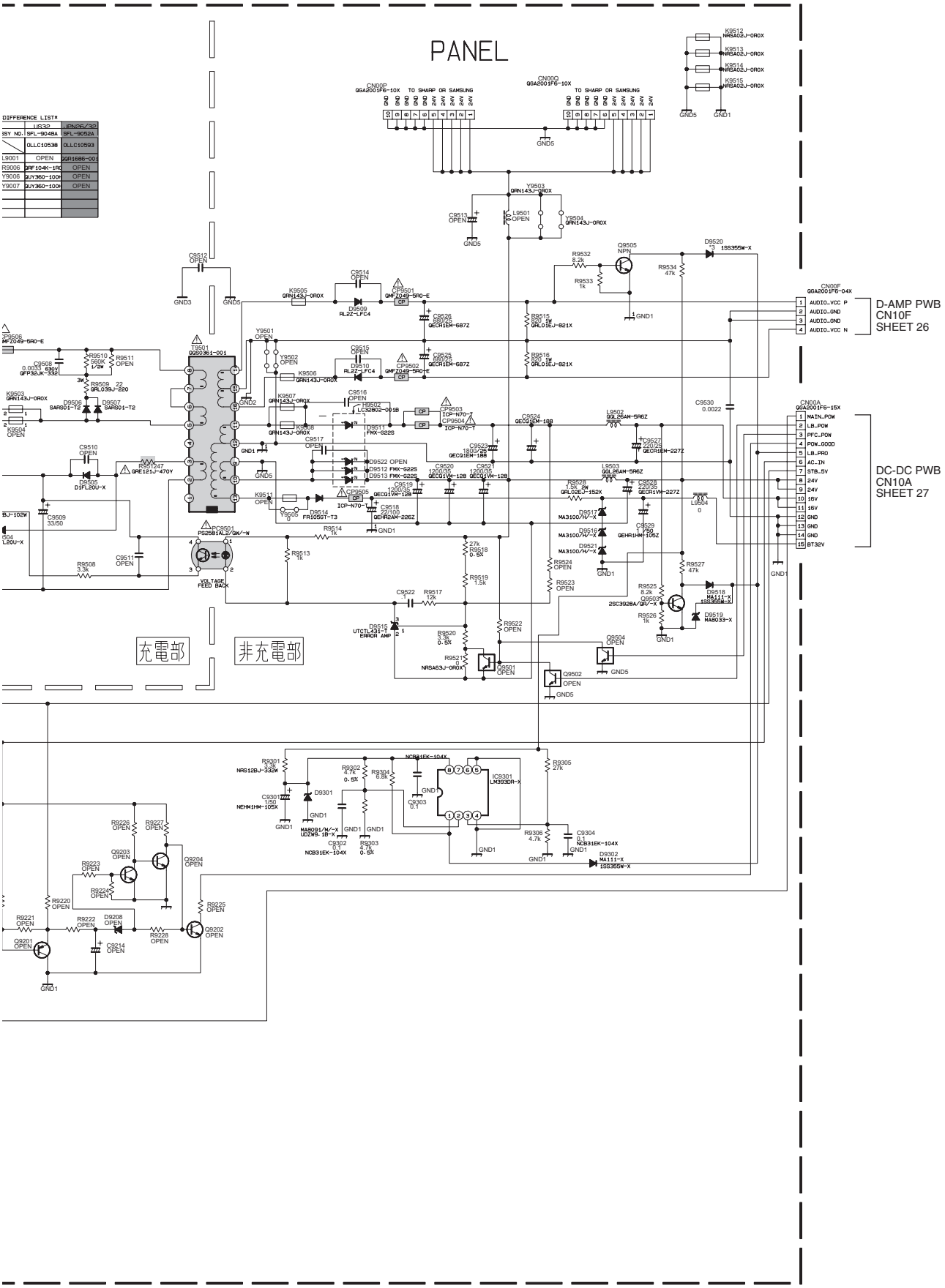
PANEL
D-AMP PWB
CN10F
SHEET 26
DC-DC PWB
CN10A
SHEET 27
充電部
非充電部
VOLTAGE FEED BACK
ERROR AMP
DIFFERENCE LIST*